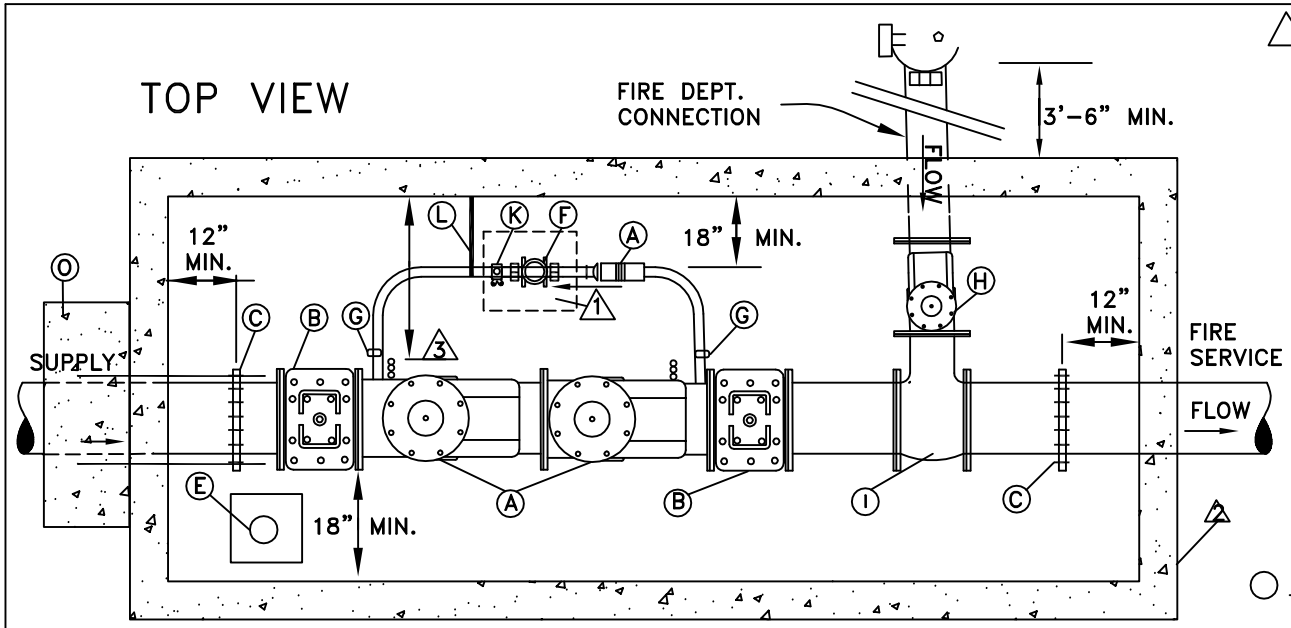

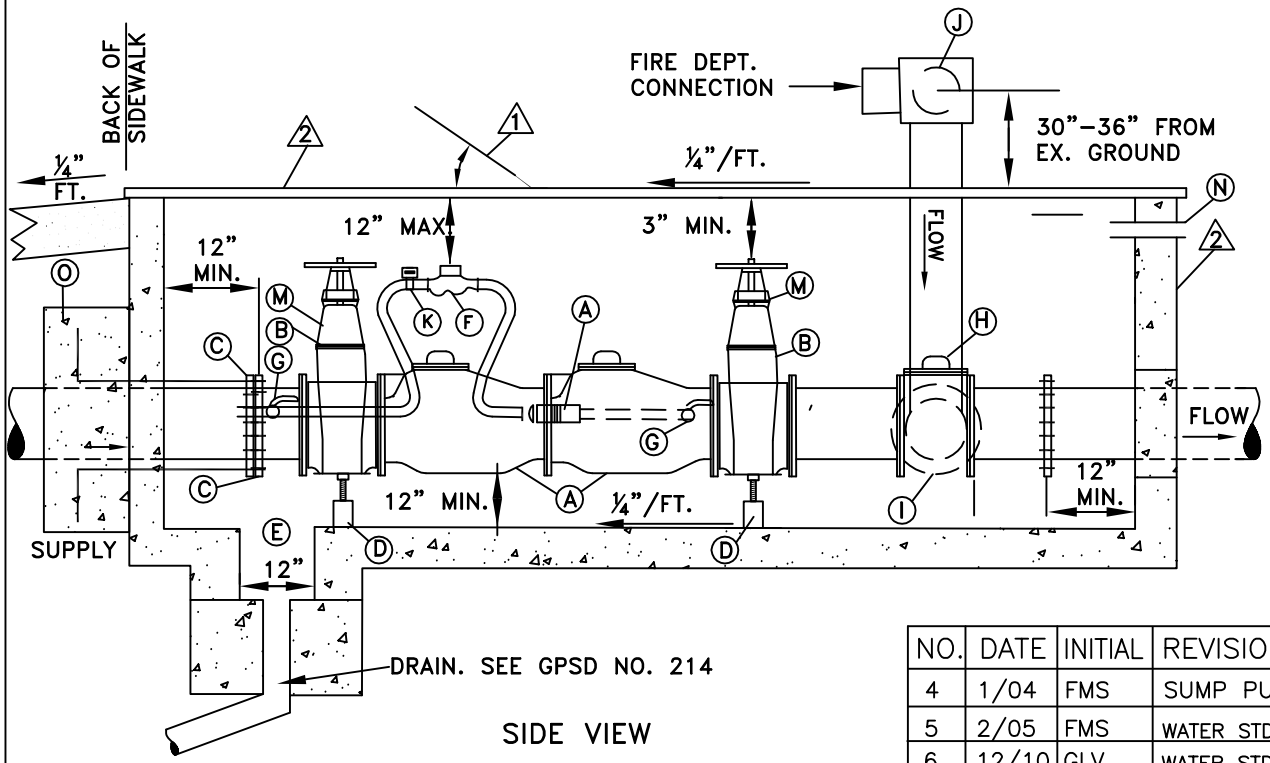

NOTES

1. PEEP HOLE LID. SEE GPSD #214-A
2. DETAILS OF CONCRETE VAULT AND STEEL LID ARE SHOWN ON GPSD #214 AND 214-A
3. 18' MIN. CLEARANCE FROM TEST COCK TO VAULT WALL ~ TYPICAL
4. WHEN DOUBLE CHECK ASSEMBLIES ARE USED WITH FIRE SPRINKLER SYSTEMS, CONTROL VALVES WILL REQUIRE TAMPER SWITCHES.
5. ALARM WIRING SHALL BE INSTALLED INSIDE ELECTRICAL CONDUIT.
6. DOUBLE CHECK ASSEMBLIES LOCATED INSIDE STRUCTURES REQUIRE A REMOTE READ METER WITH A DIGITAL REGISTER ON AN EXTERIOR WALL.
7. TEST PORT ON CHECK VALVES WILL HAVE A MIN. CLEARANCE OF 10" WITH PLASTIC OR BRASS THREADED PLUGS.
8. SAMPLES MUST BE TAKEN AT FIRST VALVE ASSEMBLY.

DESCRIPTIONS

A. DOUBLE CHECK VALVE ASSEMBLY & DETECTOR FROM USC APPROVED LIST.
B. FLANGED RW GATE VALVE WITH WHEEL OPERATOR
C. FLANGED COUPLING ADAPTER ACCESSIBLE FOR MAINT. (TYP.) UNIFLANGE OR APPROVED EQUAL
D. ADJUSTABLE SCREW JACK (NO BLOCKS ALLOWED)
E. SUMP OPENING. SEE GPSD #214
F. DETECTOR METER AS APPROVED BY CITY OF GP WATER DIV. (CUBIC FT. READING) METER TO BE BRACED.
G. BALL VALVE
H. REVERSE CHECK VALVE
I. TEE FITTING
J. ALL THREAD CONNECTION APPROVED BY FIRE DEPT PER NFPA SECTION 1963 CHAPTER 3 SEC. 3-2 SCREW THREADS, COUPLINGS, & ADAPTERS
K. SHUT OFF VALVE (STANDARD CURB STOP W/ EARS)
L. PROVIDE BRACING TO STABILIZE THIS ASSEMBLY AND METER
M. TAMPER SWITCHES
N. ELECTRICAL CONDUIT
O. CONCRETE STRADDLE BLOCK AND ALL THREAD RODS PER GPSD #215. CONNECT TO FLANGED COUPLING ADAPTER. (TYP. BOTH ENDS)

NO.	DATE	INITIAL	REVISIONS
4	1/04	FMS	SUMP PUMP
5	2/05	FMS	WATER STD DWG UPDATE
6	12/10	GLV	WATER STD DWG UPDATE

DESIGN: STAFF | DRAWN: FMS | APPROVED: DAP

CITY OF GRANTS PASS
ENGINEERING DIVISION

FIRE SERVICE ASSEMBLY
3" OR LARGER

SCALE: NONE | DWG. NO. 211