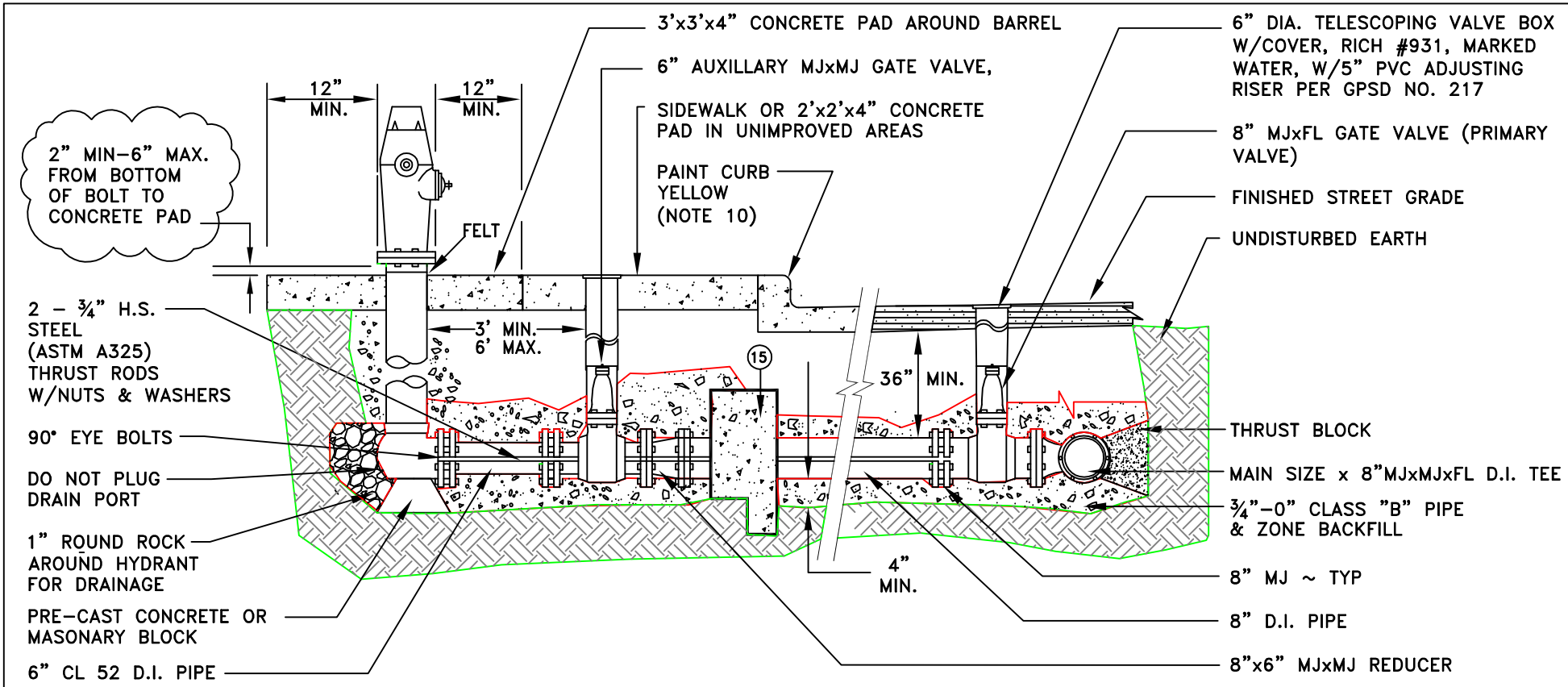

NOTES

1. THIS INSTALLATION IS FOR USE WHEN HYDRANT LEAD IS MORE THAN 50' IN LENGTH.
2. HYDRANT LEAD SHALL BE SET AT LEVEL OR NEAR LEVEL GRADE. HYDRANT GRADE SHALL BE ACCOMPLISHED BY FACTORY SUPPLIED HYDRANT EXTENSIONS OR VARIABLE HYDRANT LENGTHS.
3. HYDRANTS INSTALLED AT STREET INTERSECTIONS SHALL BE LOCATED OUTSIDE THE B.C.R. AND E.C.R. LIMITS.
4. THRUST RODS, WASHER AND NUT SHALL BE METAL THAT IS ZINC COATED.
5. HYDRANTS SHALL BE INSTALLED PLUMB.
6. FIRE HYDRANTS SHALL BE INSTALLED WITH (1) 4½" AND (2) 2½" OUTLETS AND A 5¼" MAIN VALVE, A 1½" PENTAGON OPERATING NUT (OPEN LEFT, NATIONAL STANDARD THREADS) AND A 6" HUB.
7. ACCEPTABLE FIRE HYDRANTS: MUELLER CENTURION, CLOW MEDALLIONS, KENNEDY GUARDIAN AND WATEROUS.
8. ALL VALVES WITH OPERATING NUTS MORE THAN 24" DEEP SHALL BE SUPPLIED WITH OPERATOR EXTENSION PER GPSD NO. 217
9. ALL EXPOSED METAL SURFACES SHALL BE CLEANED, PRIMED AND FACTORY PAINTED SCHOOL BUS YELLOW.
10. HYDRANTS INSTALLED WHERE CURB EXISTS: CURB TO BE PAINTED YELLOW 10' IN EACH DIRECTION FROM CENTER OF HYDRANT.
11. HYDRANTS INSTALLED IN LANDSCAPE STRIPS SHALL BE PLACED 2' BEHIND BACK OF CURB.
12. HYDRANTS SHALL BE INSTALLED OUT OF SIDEWALK.
13. INSTALL 3'x3'x4" CONCRETE PAD FOR FIRE HYDRANT. INSTALL 2'x2'x4" CONCRETE PAD AROUND VALVE TO FINISH GRADE WHEN IN UNIMPROVED AREAS.
14. ON SITE HYDRANT INSTALLS MUST BE APPROVED BY UTILITIES AND FIRE DEPTS. PRIOR TO INSTALLATION.
15. INSTALL STRADDLE BLOCK PER GPSD NO. 215
16. HYDRANTS NOT INSTALLED WITHIN THESE TOLERANCES WILL BE RESET BY THE CITY AT CONTRACTORS' EXPENSE.

NO.	DATE	INITIAL	REVISIONS
6	2/05	FMS	WATER STD. UPDATE
7	10/09	GLV	WATER STD. UPDATE
8	11/10	GLV	ADD ROUND ROCK
DESIGN: STAFF		DRAWN: SLN	APPROVED: DAP

CITY OF GRANTS PASS
ENGINEERING DIVISION

FIRE HYDRANT–LONG LEAD

SCALE: NONE

DWG. NO. 202–A