APPENDIX K

PEDESTRIAN BRIDGE AND EXISTING PUMP STATION

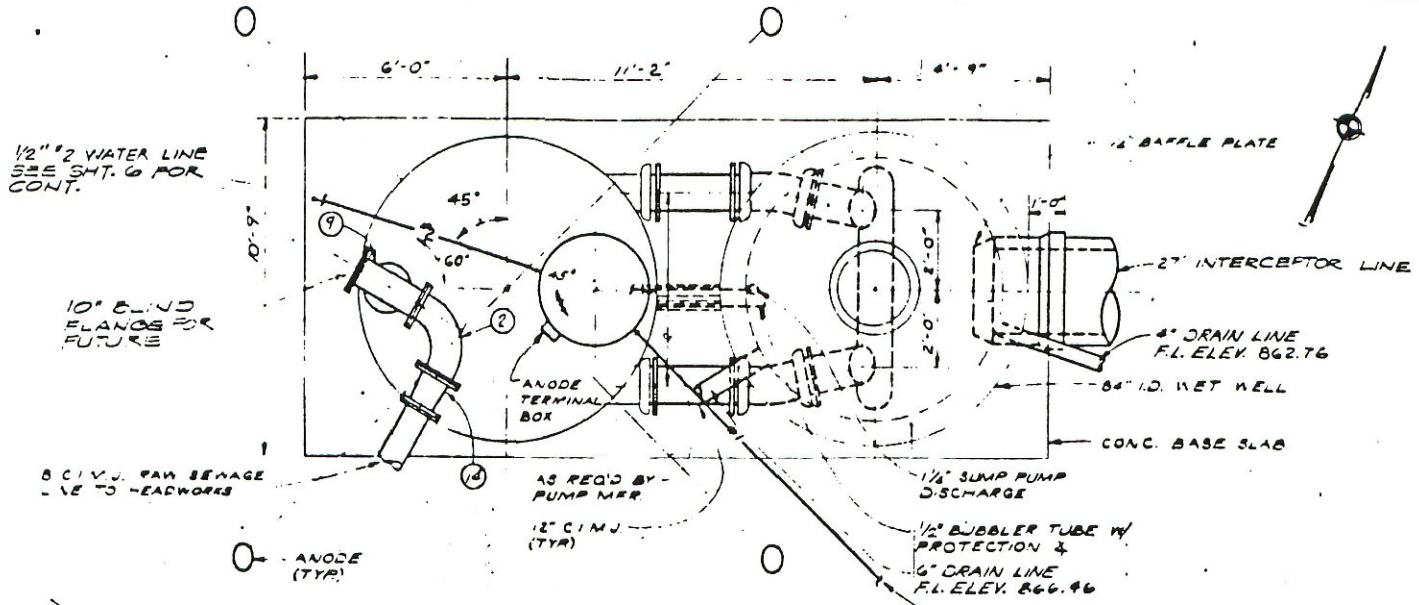

PUMP STATION PLAN

3/8" = 1'-0"

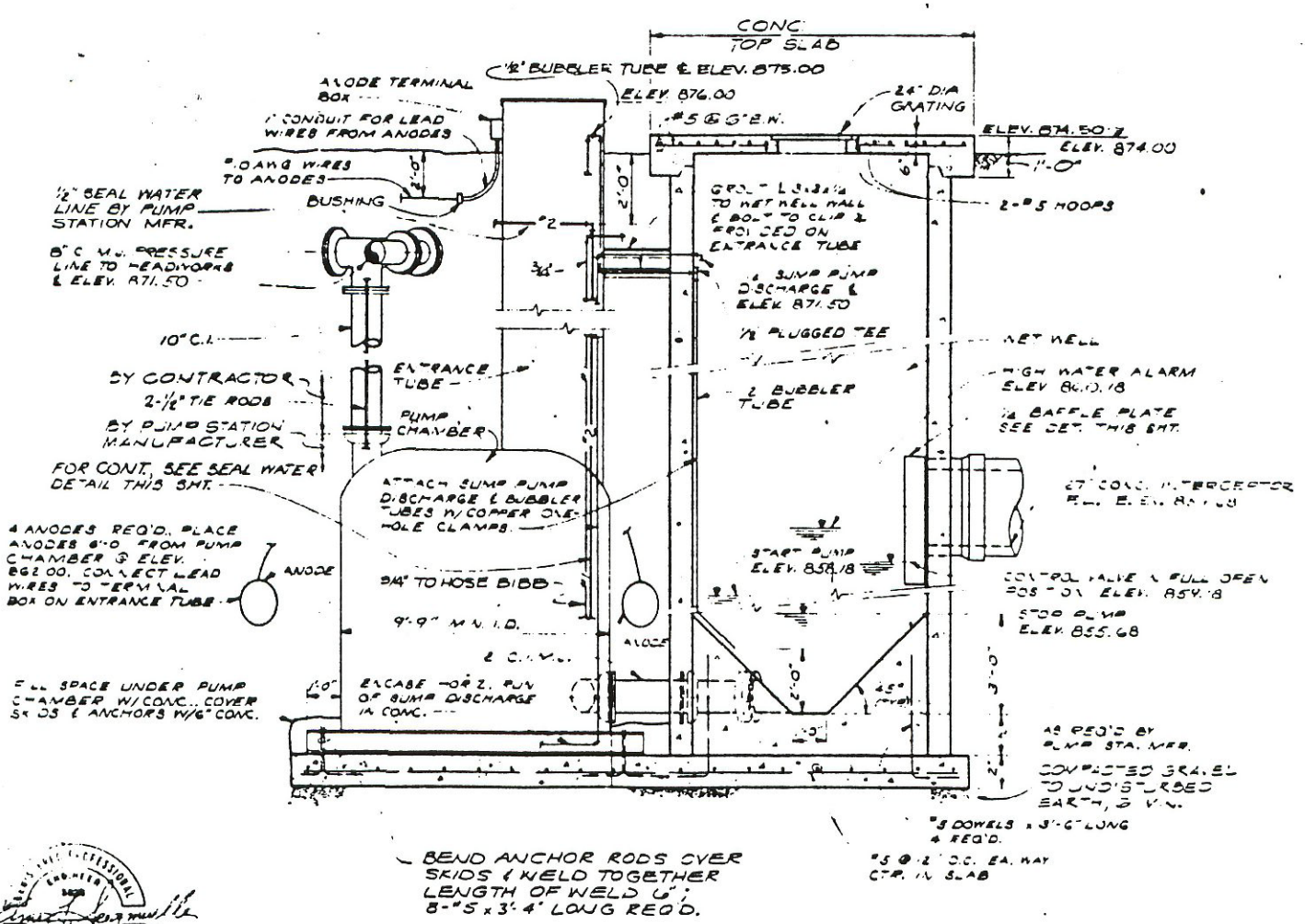

COMPOSITE SECTION

3/8" = 1'-0"

REGISTERED PROFESSIONAL ENGINEER 8020 OREGON MARCH 3, 1976 ELMER L. SEEBMUELLER

REGISTERED PROFESSIONAL ENGINEER 8050 OREGON JULY 22, 1974 JOSEPH A. GAUTHIER

CH2M HILL	DES. JDH			Existing WWTP Influent Pump Station		
	DR. DSP					
	CHK. ELS/ERA	1	12/78	RECORD DRAWING	JDW	GPF
	APPD. JAG	NO.	DATE	REVISION	BY	APPD.

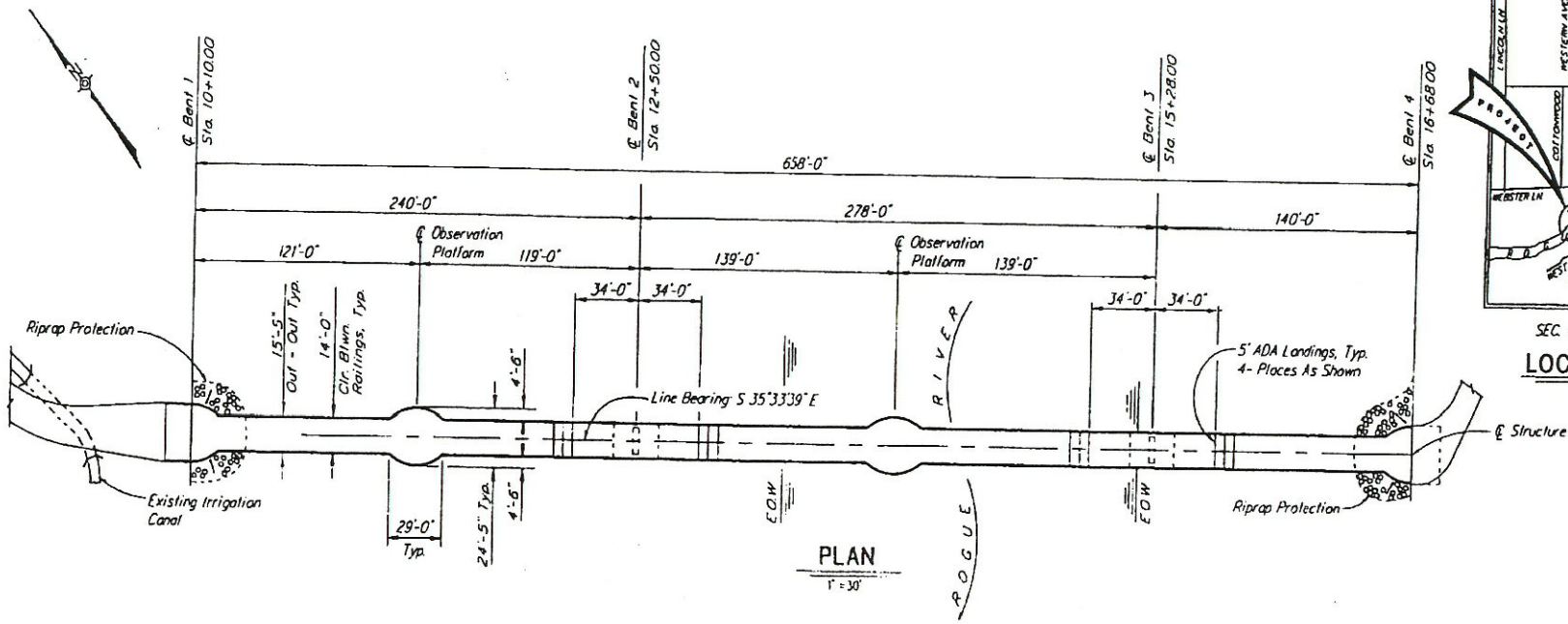

PLAN

1" = 30'

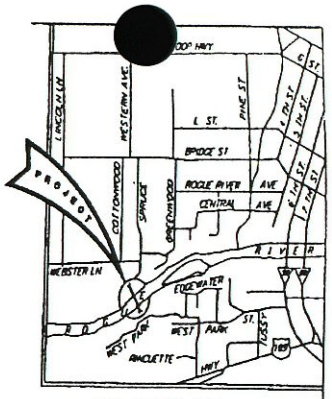

SEC. 19, T.365, R.5W, W.M.

LOCATION MAP

NO SCALE

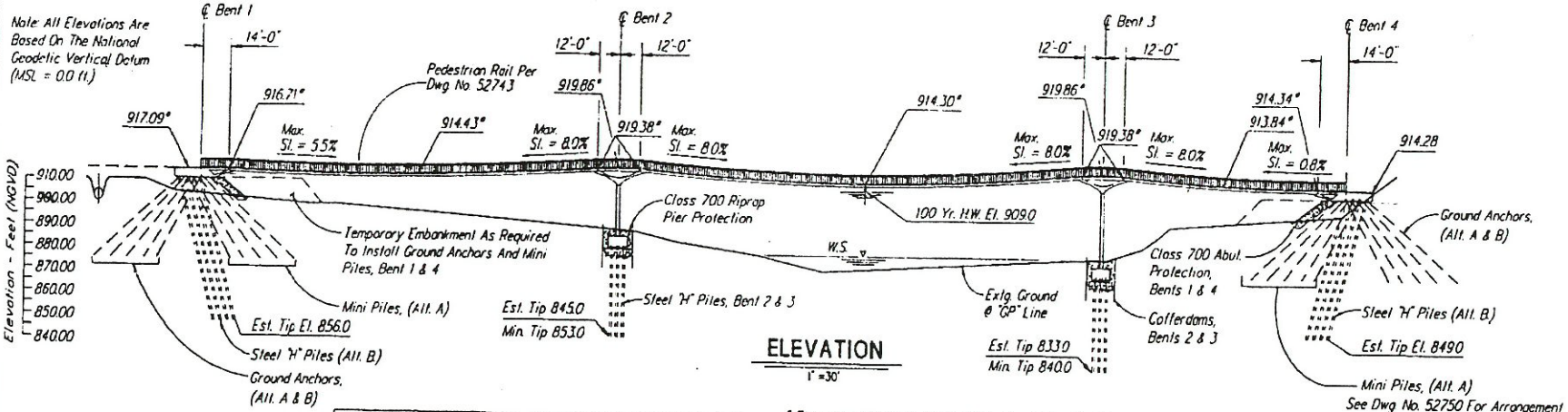

ELEVATION

1" = 30'

* Elevations Shown Are Finish Grade Top Of Cast-In-Place Deck At Centerline Of Structure, Typical.

HYDRAULIC DATA			
	DESIGN FLOOD	BASE FLOOD	OVERTOPPING FLOOD
DISCHARGE CFS	130,500	130,500	140,700
FREQUENCY - YRS.	100	100	130
H.W. ELEVATION NAT. CHANNEL FT.	908.98	908.98	910.01

For General Notes, See Dwg. No. 52732

△	DATE	REVISION	BY

DRAFTED D. Fever

CHECKED Jiri Strasky

REVIEWED William H. Hall, Chief Engineer

DESIGNER — EXPIRES 12-31-96

BRIDGE ENGINEER — REVIEWED TERRY SHIKE — EXPIRES N/A

Jiri Strasky, Ph.D., P.E. Consulting Engineer

OREGON DEPARTMENT OF TRANSPORTATION
BRIDGE ENGINEERING SECTION

ACCOMPANIED BY DWGS. 34959, 52731 Thru 52757

BRIDGE NO. 18038

DATE Dec. 1995

CALC. BOOK

OBEC Consulting Engineers
244 COUNTRY CLUB ROAD EUGENE, OREGON 97401
Fax (503) 683-6576 Tel (503) 683-6090

GRANTS PASS (ROGUE RIVER) PEDESTRIAN/BIKEWAY BRIDGE
GRANTS PASS PEDESTRIAN/BIKEWAY BRIDGE SEC.
JOSEPHINE COUNTY

PLAN & ELEVATION

FEDERAL HIGHWAY ADMINISTRATION — REGION 10 — OREGON DIVISION — PROJECT NUMBER

SHEET 1 OF 28

DRAWING NO. 52730

12/15/95 I:\CAD\394002\ACAD\394002TO

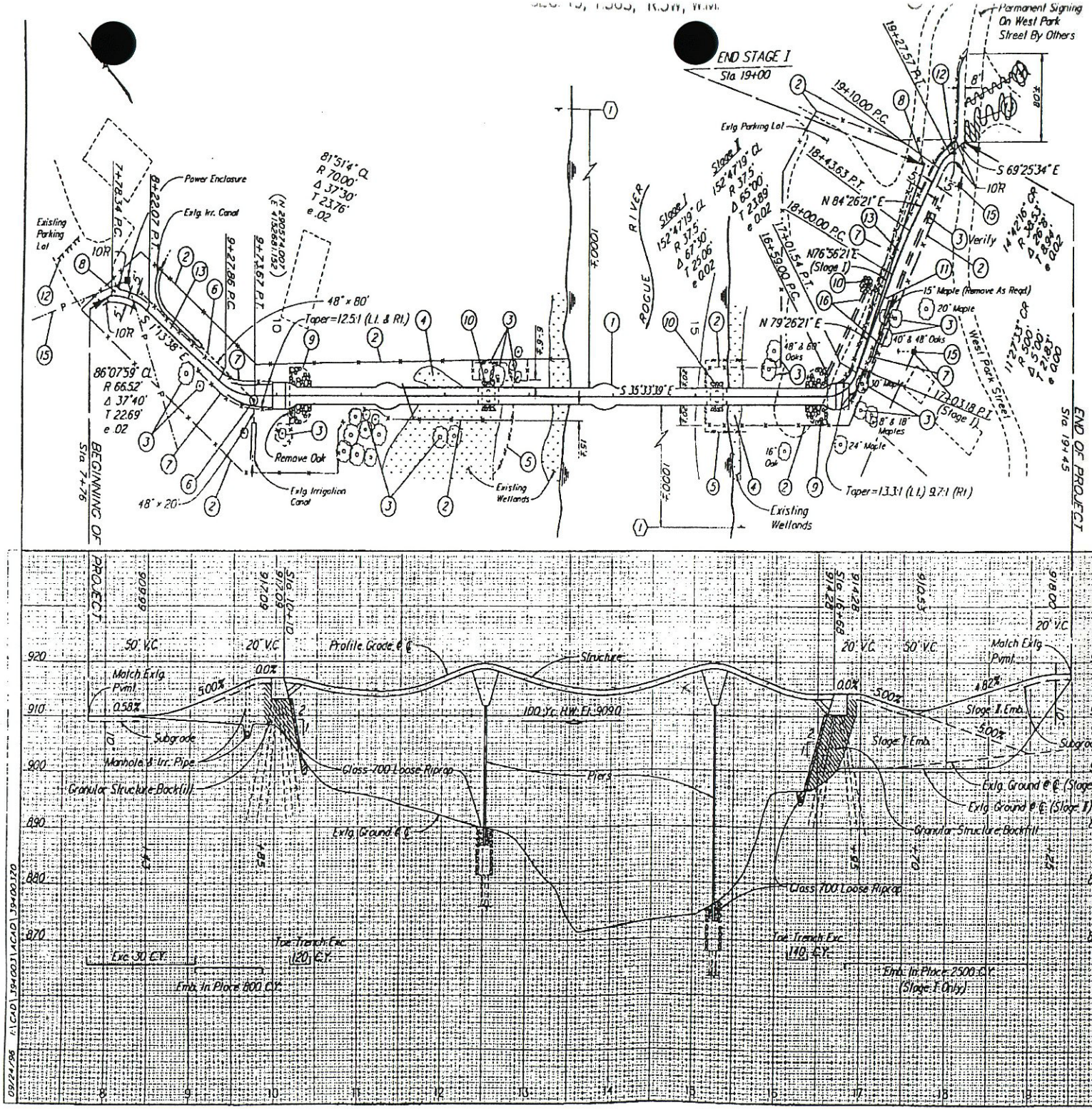

(1) Construct 10' x 658' Pedestrian Bridge. (See Sheet 1 For Drawing Numbers.)

(2) Construct Temporary Prote... - 2050 Lin. Ft. (For Details, See Sheet ...)

(3) Existing Trees. Preserve And Protect. Trim Only As Approved By City Landscape Architect.

(4) Wetland Restoration Limits (For Details, See Sheet 2).

(5) Temporary Silt Fences (See Sheet 2A For Erosion Control Plans).

(6) Install 48" Irrigation Pipe w/ 4:1 Slope Modified Safety End Sections (2) - 100 Lin. Ft. (For Details, See Sht. 2). Construct Manhole - 1. (See Std. Dwgs. 2050, 2050A, & 2137).

(7) Construct Tubular Pedestrian Rail - 540 Lin. Ft. (For Details, See Sheet 2B).

(8) Construct Removable Bollards - 6. (For Details, See Sheet 2B).

(9) Construct Loose Riprap (Class 700) - 1100 Ton (For Details, See Bridge Plans).

(10) Construct Loose Riprap (Class 700) - 370 Ton (For Details, See Bridge Plans).

(11) Install 12" Culvert Pipe - 35 Lin. Ft.

(12) Install Temporary 8'-0" Bill LR Barricades - 6 Total. (See Std. Dwg. 2128).

(13) Permanent Striping On Main Paint Crosswalk Per City Standards. (Stage 1) NOT USED

(14) Perform Traffic Control In Conformance With Std. Dwg. No. 1202, 2 - Lane & 3 - Way Roadway, Shoulder / One Lane Closure, As Required (Stage 1) NOT USED

(15) Underground Power Line & Power Pole Guys Adjust As Req'd (By Others)

(16) Construct Drainage Ditch (See Sht. 2 For Details) (Earth Work Incl. In Main Rwdy. Dist.)

(1) (2 Required) (Install On River As Directed)

NOTE:
1. Signs To Be Type O With Series C Letters & Numbers.
2. Coordinate Sign Locations With The Engineer.

GRANTS PASS PEDESTRIAN/ BIKEWAY BRIDGE SECTION

JOSEPHINE COUNTY

FEDERAL HIGHWAY ADMINISTRATION		PROJECT NUMBER	SHEET NO.
REGION 10	OREGON DIVISION	.	3

File No. 7689

09/24/96 A:\CAD\39400\1\ACAD\39400170

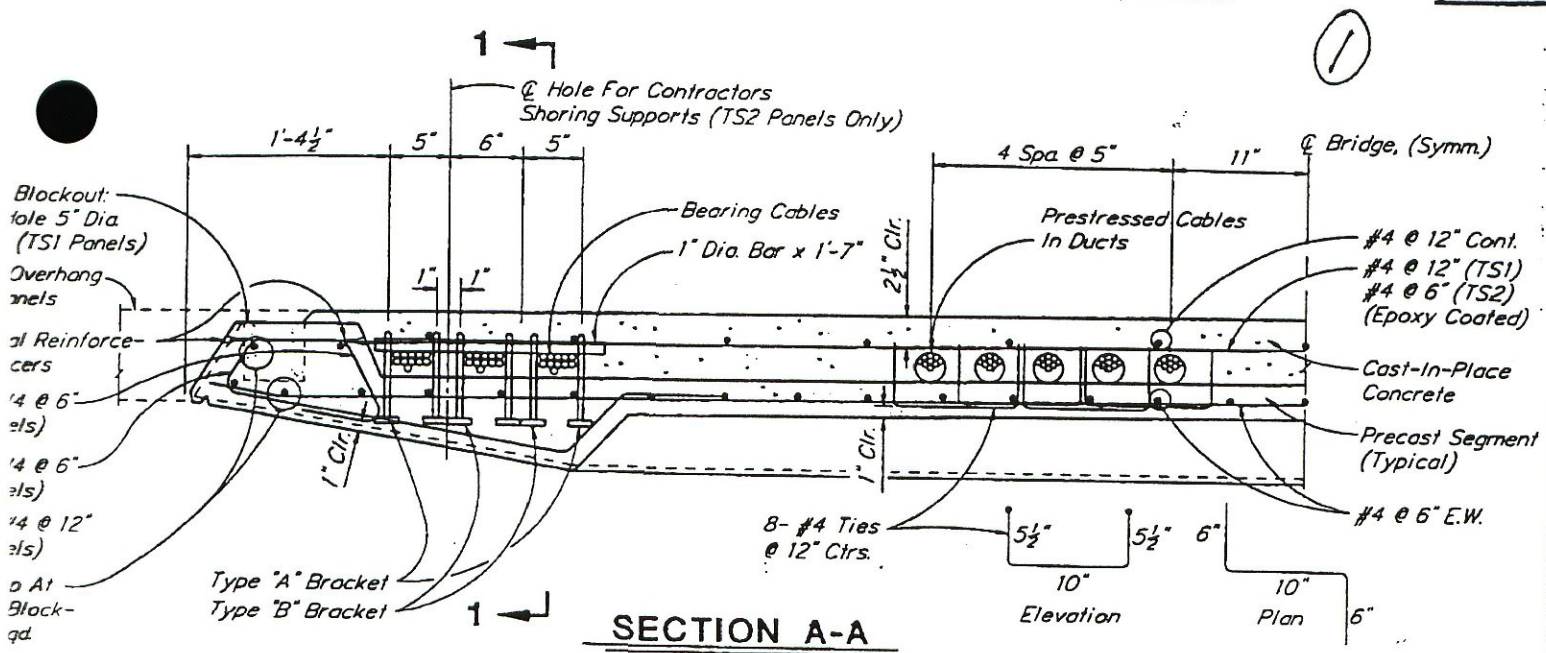

SECTION A-A

1 1/2"=1'-0"

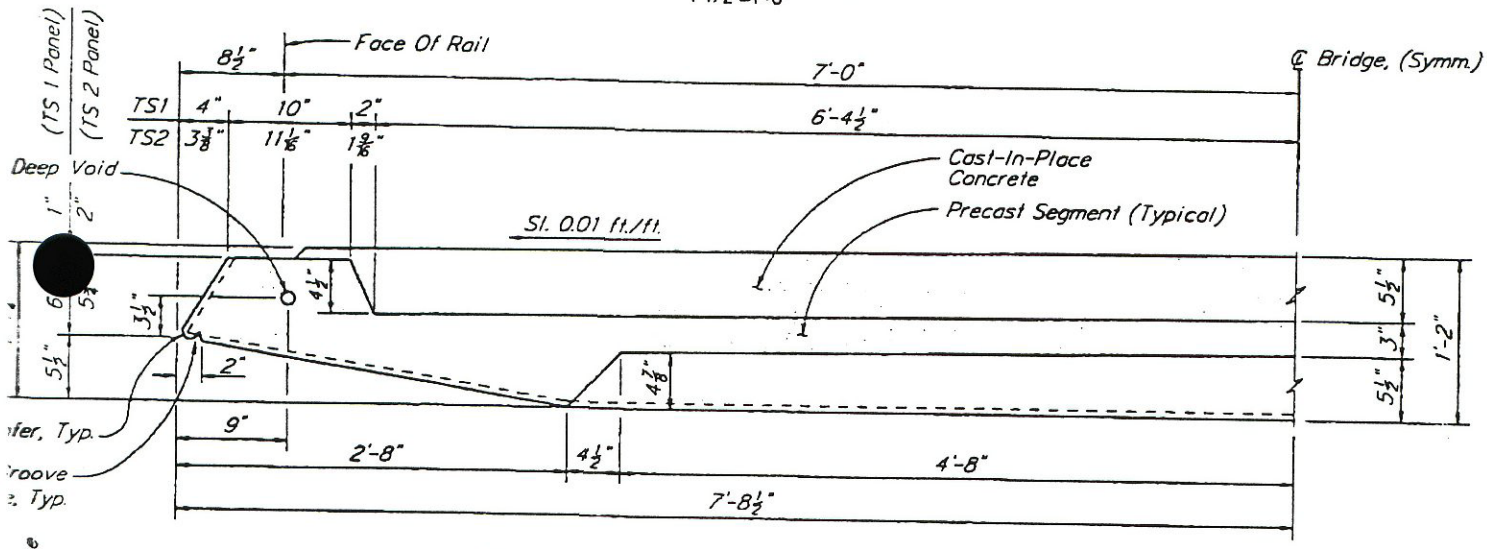

SECTION A-A DIMENSIONS

1 1/2"=1'-0"

PANELS NOTES:

1. All Precast panel surfaces to receive cast in place concrete to have a medium broom finish or sand blast, typ. All other surfaces to have a form finish, typ.
2. Position of temporary supports for transportation and stock-piling shall be submitted for approval.
3. Metal panel forms shall be utilized (See special provisions).
4. Brackets "A" & "B" shall be cast with 1" Diameter bar in place to ensure uniform tranfer of load to all bracket legs simultaneously.

Noted Or Shown Otherwise

trasky, Ph.D., P.E. Consulting Engineer

OBEC Consulting Engineers
244 COUNTRY CLUB ROAD
EUGENE, OREGON 97401
Fax:(503)683-6576
Tel:(503)683-6090

OREGON DEPARTMENT OF TRANSPORTATION
BRIDGE ENGINEERING SECTION

BRIDGE NO. 18038	GRANTS PASS (ROGUE RIVER) PEDESTRIAN/BIKEWAY BRIDGE	SHEET 7 OF 28
DATE Dec. 1995		
CALC. BOOK	DECK DETAILS / TS1 & TS2 PANELS	DRAWING NO. 52736

File No. 7120

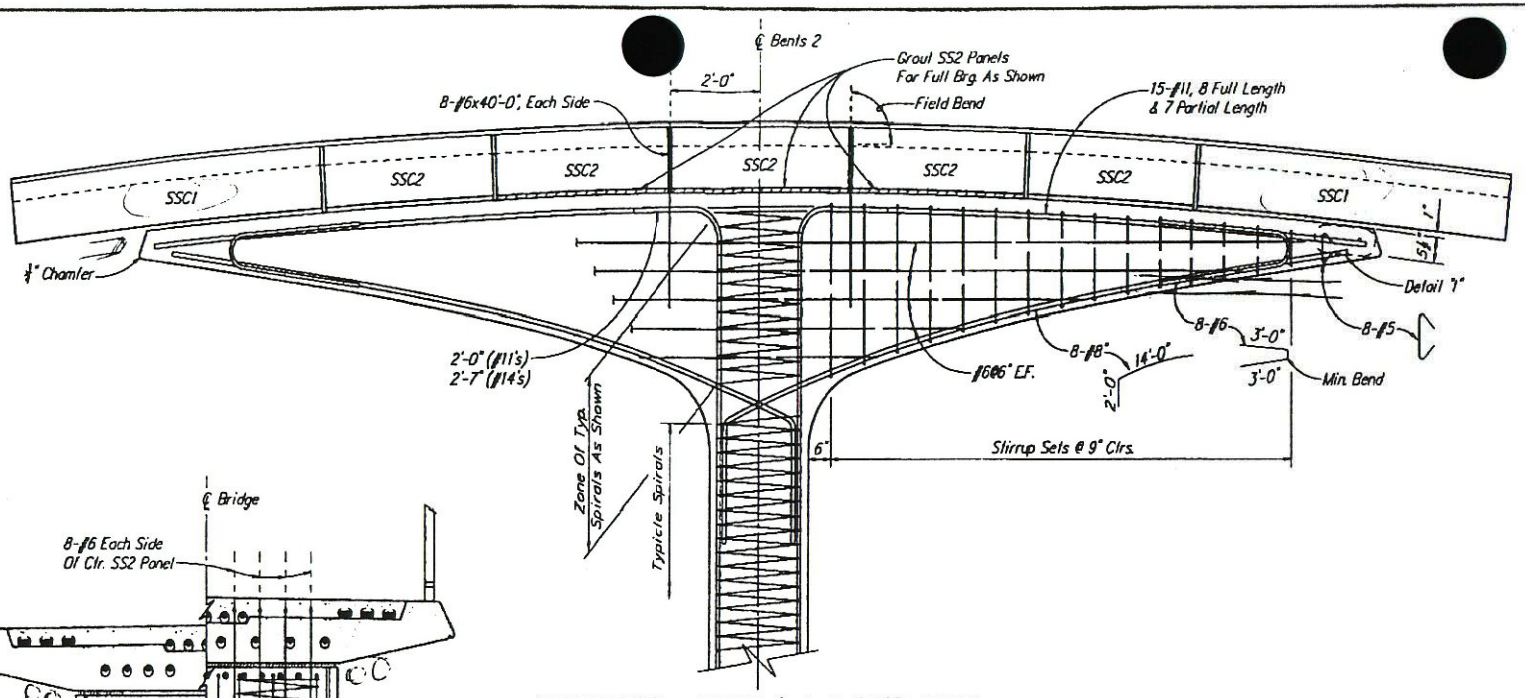

ELEVATION - BENT 2 & 3 PIER HEAD

3/4"=1'-0"

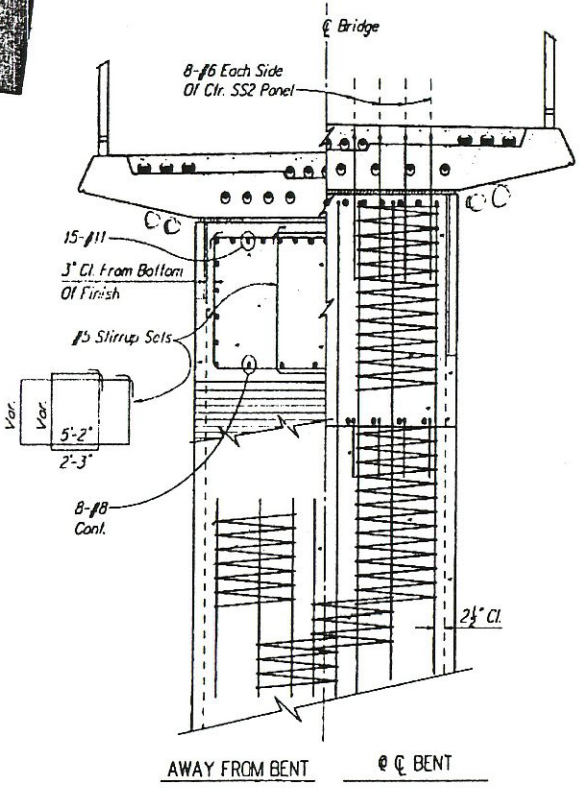

CROSS SECTION - BENT 2 & 3 PIER HEAD

3/4"=1'-0"

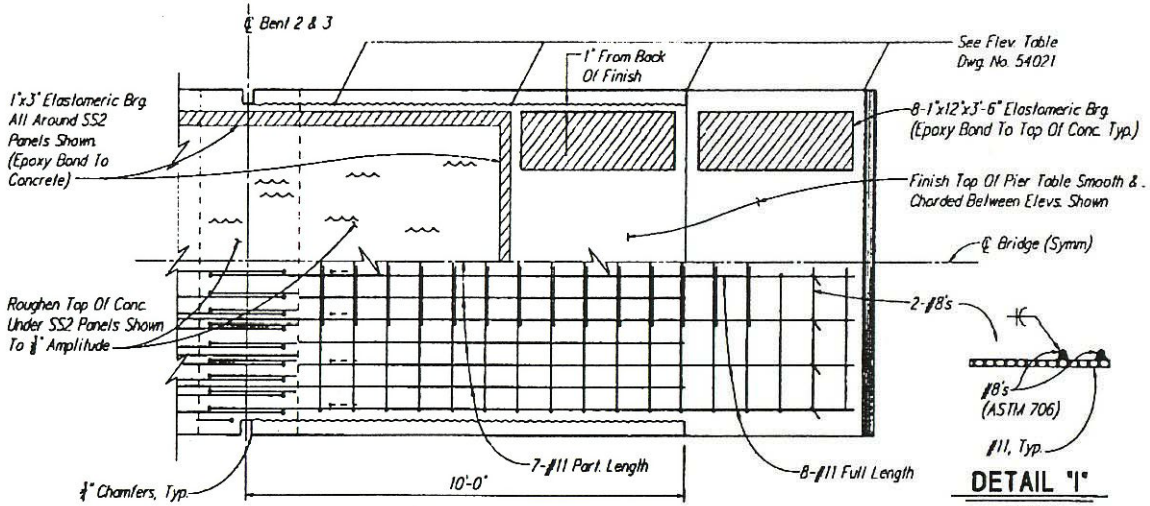

PLAN - BENT 2 & 3 PIER HEAD

3/4"=1'-0"

DETAIL "I"

NO SCALE

△	DATE	REVISION	BY

DRAFTED D. Axtell

CHECKED Jiri Strasky

REVIEWED William H. Holt, Chief Engineer

DESIGNER

Jiri Strasky, Ph.D., P.E. Consulting Engineer

OBEC Consulting Engineers

244 COUNTRY CLUB ROAD EUGENE, OREGON 97401 Fax(503)683-6576 Tel(503)683-6090

OREGON DEPARTMENT OF TRANSPORTATION
BRIDGE ENGINEERING SECTION

BRIDGE NO. 18038

DATE Sept. 1996

CALC. BOOK

GRANTS PASS (ROGUE RIVER) PEDESTRIAN/BIKEWAY BRIDGE

BENTS 2 & 3 REINFORCING DETAILS

SHEET 23 OF 23

DRAWING NO 54022

09/26/96 I:\CAD\394003\ACAD\394003GO